IT'S A NEW ERA OF
INNOVATION
AT AMERICAN EAGLE
MANUFACTURING

AMERICAN EAGLE MANUFACTURING LLC

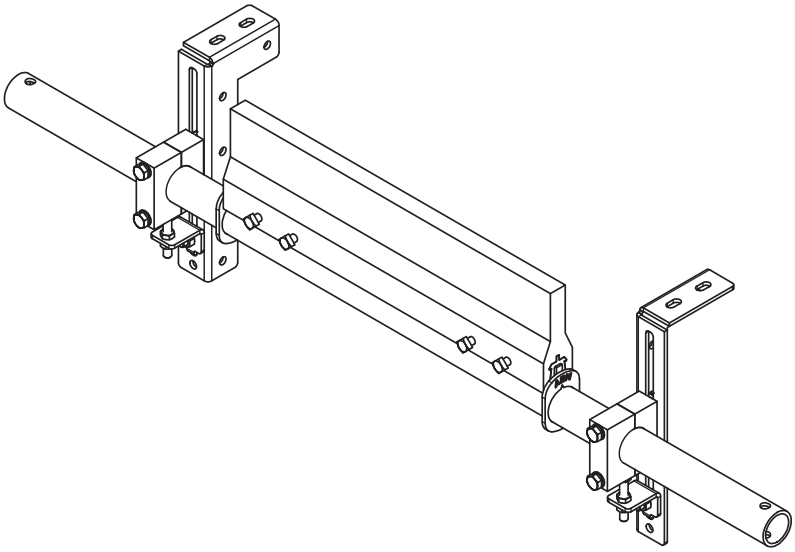

E7SC SERIES
INSTRUCTION MANUAL

UNI-BLADE™
PATENT NO. 12246927

FACILITY NAME

CONVEYOR NUMBER

DATE OF INSTALLATION

INSTALLED BY

COPYRIGHT 2026®

DISCLAIMER/SAFETY

3.1 Disclaimer

American Eagle Manufacturing LLC disclaims any liability for improper use or application of this product not in compliance with instructions and specifications contained herein or for any damages due to contamination of material as a result of users' failure to maintain and inspect equipment. Liability shall be limited to the repair or replacement of AEM Equipment shown to be defective by cause of manufacturing.

PLEASE NOTE:

Urethane products being put into service after their expected shelf-life has been exceeded may deteriorate more quickly than urethane that is within that expected parameter. This shelf-life will be largely dependent on storage conditions; therefore, urethane products should remain in storage for as short a time as possible, in cool dry conditions and out of direct sunlight or heat. If appropriately stored, expected shelf-life is approximately 2 years. Upon visual inspection, if there are any questions as to the viability of a urethane part, please contact American Eagle Manufacturing or a distributor representative.

PLEASE NOTE:

American Eagle Manufacturing is not responsible for damage or loss occurring in transit. Upon receipt and/or inspection, if any damage to packaging has been noted, please retain any damaged packaging and/or goods. The delivery or freight service responsible for transit-damaged will require this packaging in order to file any claim for recompense. If anything is missing, please contact American Eagle Manufacturing or a distributor representative for replacement.

3.2 Safety

Adhere to all safety rules defined by government (OSHA/MSHA) 1910.147, owner/employer and site specific safety rules.

- DANGER -

Lockout/Tagout procedures must be followed before any maintenance, service, repair, or installation of equipment begins on the conveyor. Failure to follow all safety rules can result in injury or death.

SAFETY

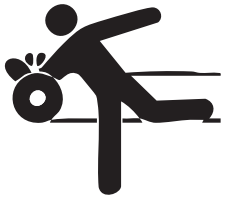

DANGER

While the belt is running, do not approach conveyor or its accessories.

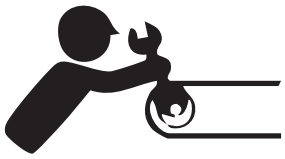

DANGER

Never adjust an operating belt cleaner. Follow all lockout/tagout procedures.

DANGER

If welding or cutting a chute wall prior to installation, be sure to test the dust/gas content in order to avoid explosion. Cover conveyor belt with flame-retardant material.

DANGER

Belt cleaner assembly, depending on belt width and installation factors, may require multiple people to lift. Please take appropriate precautions in order to avoid injury.

DANGER

Remove tools, accessories, and debris from area before returning conveyor to service.

CONTINUOUS IMPROVEMENT

BECAUSE WE'RE ON A MISSION TO SET THE STANDARD.

Given everything that we've updated about our secondary cleaners, we're anticipating some questions.

Why do our secondary blades measure in at Belt Width + 3 inches?

Because we're basing it on the CEMA standard measurement for return rollers. CEMA C return rollers are normally at least equal to Belt Width +3 inches, in order to allow for the natural travel of the belt (up to 1-1/2 inches per side). They are designed that way to account for any belt alignment issues, while lessening the chance of the side walls being damaged while the belt is in motion.

If the cleaner assembly doesn't account for the same variation and movement, you're running a high risk of your belt not being cleaned across the full width. Belt-width secondary cleaners didn't leave the same room for error that the return roller was designed for. So, after years of evaluation, we decided to base our blade width on the same standard, giving the same allowance for imperfection.

What about the carbide with the rounded corners?

Another note we made during our research was the capacity for carbide-tipped blades to remove rubber while removing debris. So, in order to protect your belt, we also developed custom carbide inserts, with radiuses at the ends, to decrease the chance of damage, effectively avoiding the cutting points.

And how does the UniBlade design work for secondaries?

Regardless of OEM, the blade will simply drop onto the bar. Tighten the four included bolts after confirming placement, and the blade is installed. We really wish there were more words, but unfortunately, it's that simple.

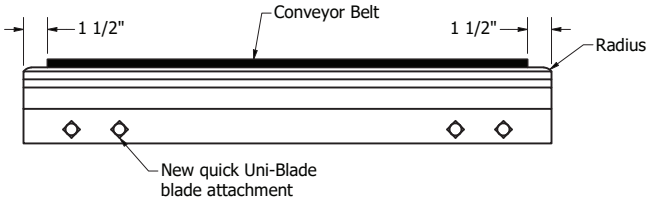

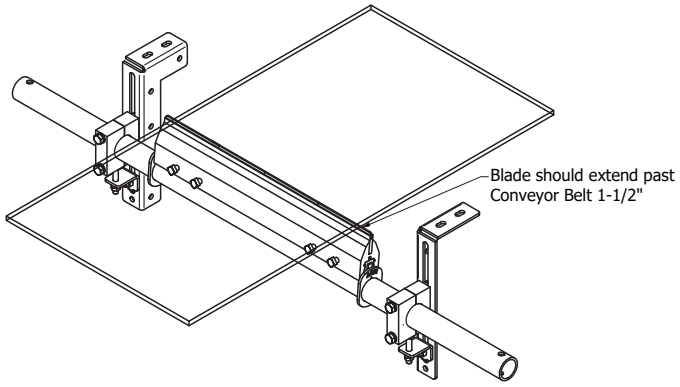

E7SC5 SECONDARY REPLACEMENT PARTS

Parts List

Num.	Part Number	Description	Qty.
①	SC5xxxxx	5” Secondary Blade	1
②	SCPB-xx	Pipe & Bar Assembly	1
③	SCB-102	RH Mounting Bracket	1
④	SCB-103	LH Mounting Bracket	1
⑤	E7 Block Kit	Clamp Block Kit	2
⑥	PMSC-104	Adjusting Bracket	2
⑦	W3213685	Hardware Kit	2

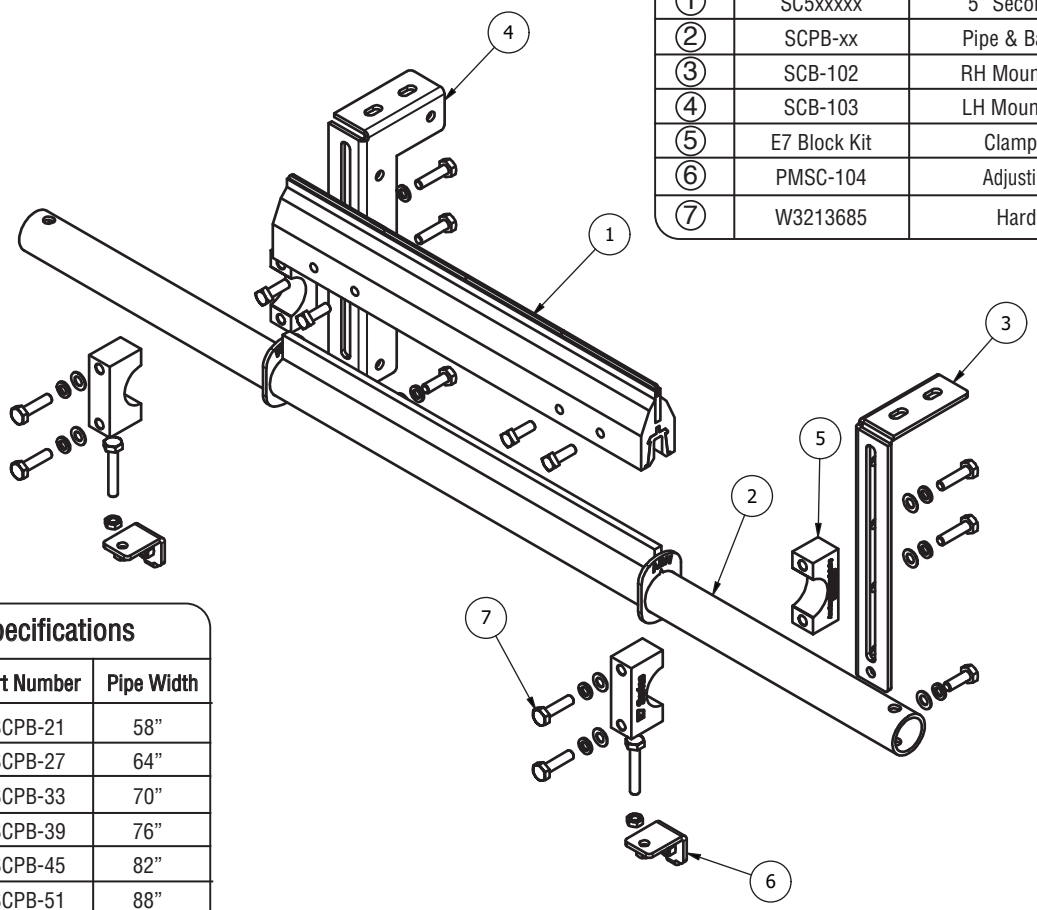

②

Pipe Specifications

Belt Width	Part Number	Pipe Width
18”	SCPB-21	58”
24”	SCPB-27	64”
30”	SCPB-33	70”
36”	SCPB-39	76”
42”	SCPB-45	82”
48”	SCPB-51	88”
54”	SCPB-57	94”
60”	SCPB-63	100”
72”	SCPB-75	112”

URETHANE BLADE

Belt Width	+3 Blade Width	AEM Part Number	Weight
24”	27”	SC5MUR27	13.5 lbs.
30”	33”	SC5MUR33	15 lbs.
36”	39”	SC5MUR39	19 lbs.
42”	45”	SC5MUR45	22 lbs.
48”	51”	SC5MUR51	25 lbs.
54”	57”	SC5MUR57	28 lbs.
60”	63”	SC5MUR63	31 lbs.
66”	69”	SC5MUR69	32.5 lbs.
72”	75”	SC5MUR75	35.5 lbs.
84”	87”	SC5MUR87	42.5 lbs.
96”	99”	SC5MUR99	48.5 lbs.

CARBIDE BLADE

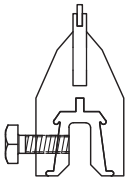

Belt Width	+3 Blade Width	AEM Part Number	Weight
24”	27”	SC5MGC27	16.5 lbs.
30”	33”	SC5MGC33	20 lbs.
36”	39”	SC5MGC39	23.5 lbs.
42”	45”	SC5MGC45	27 lbs.
48”	51”	SC5MGC51	30.5 lbs.
54”	57”	SC5MGC57	34.5 lbs.
60”	63”	SC5MGC63	37.8 lbs.
66”	69”	SC5MGC69	41.5 lbs.
72”	75”	SC5MGC75	45 lbs.
84”	87”	SC5MGC87	52.5 lbs.
96”	99”	SC5MGC99	59.5 lbs.

AR BLADE

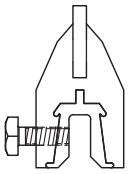

Belt Width	+3 Blade Width	AEM Part Number	Weight
24”	27”	SC5MGA27	16.5 lbs.
30”	33”	SC5MGA33	20 lbs.
36”	39”	SC5MGA39	23.5 lbs.
42”	45”	SC5MGA45	27 lbs.
48”	51”	SC5MGA51	30.5 lbs.
54”	57”	SC5MGA57	34.5 lbs.
60”	63”	SC5MGA63	37.8 lbs.
66”	69”	SC5MGA69	41.5 lbs.
72”	75”	SC5MGA75	45 lbs.
84”	87”	SC5MGA87	52.5 lbs.
96”	99”	SC5MGA99	59.5 lbs.

E7SC7 SECONDARY REPLACEMENT PARTS

Parts List

Num.	Part Number	Description	Qty.
①	SC7xxxxx	7” Secondary Blade	1
②	SCPB-xx	Pipe & Bar Assembly	1
③	SCB-102	RH Mounting Bracket	1
④	SCB-103	LH Mounting Bracket	1
⑤	E7 Block Kit	Clamp Block Kit	2
⑥	PMSC-104	Adjusting Bracket	2
⑦	W3213685	Hardware Kit	2

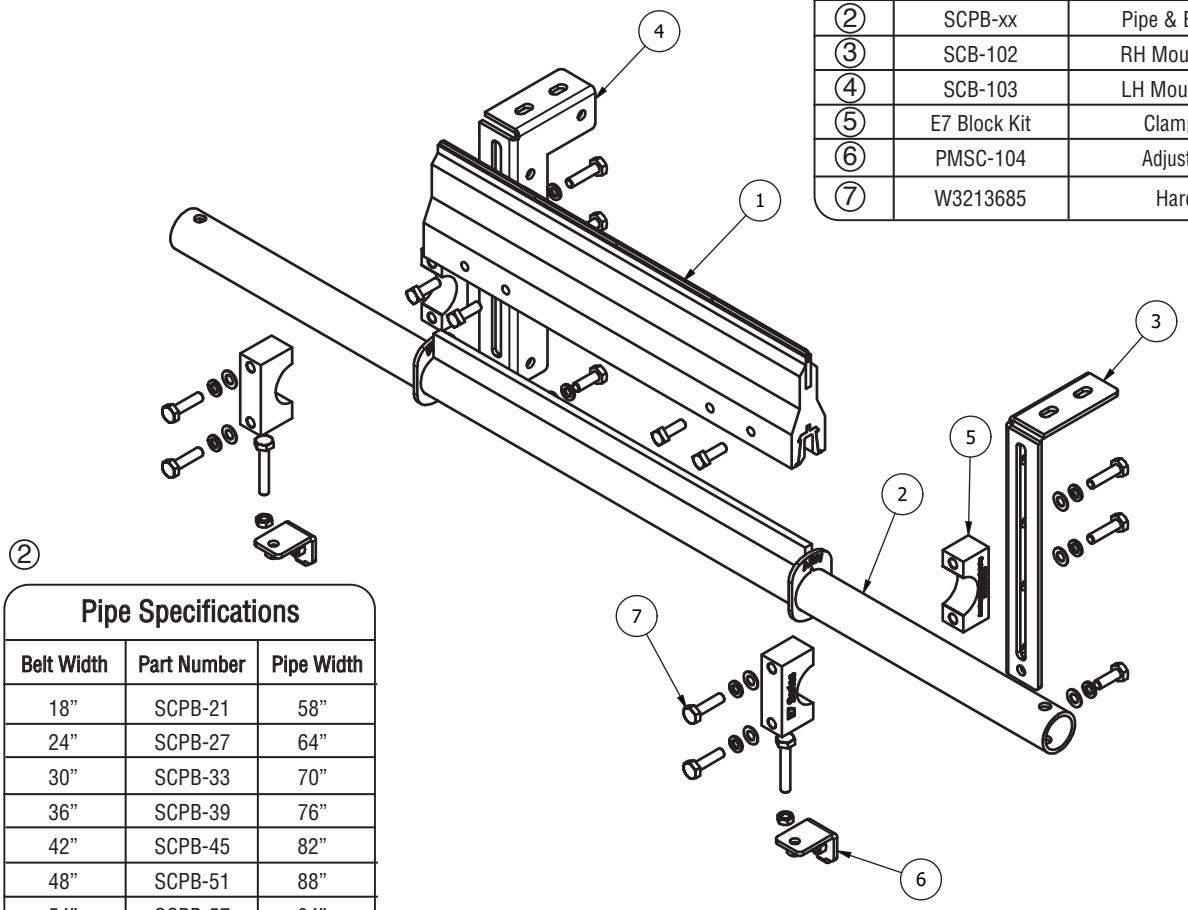

②

Pipe Specifications

Belt Width	Part Number	Pipe Width
18”	SCPB-21	58”
24”	SCPB-27	64”
30”	SCPB-33	70”
36”	SCPB-39	76”
42”	SCPB-45	82”
48”	SCPB-51	88”
54”	SCPB-57	94”
60”	SCPB-63	100”
72”	SCPB-75	112”

URETHANE BLADE

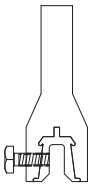

Belt Width	+3 Blade Width	AEM Part Number	Weight
24”	27”	SC7MUR27	16.5 lbs.
30”	33”	SC7MUR33	20 lbs.
36”	39”	SC7MUR39	23.5 lbs.
42”	45”	SC7MUR45	27 lbs.
48”	51”	SC7MUR51	30.5 lbs.
54”	57”	SC7MUR57	34.5 lbs.
60”	63”	SC7MUR63	38 lbs.
66”	69”	SC7MUR69	41.5 lbs.
72”	75”	SC7MUR75	45 lbs.
84”	87”	SC7MUR87	52.5 lbs.
96”	99”	SC7MUR99	59.5 lbs.

CARBIDE BLADE

Belt Width	+3 Blade Width	AEM Part Number	Weight
24”	27”	SC7MGC27	20.5 lbs.
30”	33”	SC7MGC33	28 lbs.
36”	39”	SC7MGC39	33 lbs.
42”	45”	SC7MGC45	38.5 lbs.
48”	51”	SC7MGC51	43.5 lbs.
54”	57”	SC7MGC57	48.5 lbs.
60”	63”	SC7MGC63	53.5 lbs.
66”	69”	SC7MGC69	59 lbs.
72”	75”	SC7MGC75	64 lbs.
84”	87”	SC7MGC87	74 lbs.
96”	99”	SC7MGC99	85 lbs.

AR BLADE

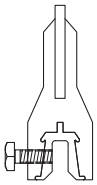

Belt Width	+3 Blade Width	AEM Part Number	Weight
24”	27”	SC7MGA27	20.5 lbs.
30”	33”	SC7MGA33	28 lbs.
36”	39”	SC7MGA39	33 lbs.
42”	45”	SC7MGA45	38.5 lbs.
48”	51”	SC7MGA51	43.5 lbs.
54”	57”	SC7MGA57	48.5 lbs.
60”	63”	SC7MGA63	53.5 lbs.
66”	69”	SC7MGA69	59 lbs.
72”	75”	SC7MGA75	64 lbs.
84”	87”	SC7MGA87	74 lbs.
96”	99”	SC7MGA99	85 lbs.

E7SC SERIES OPTIONS

E7SC5-M-UR Urethane Blade

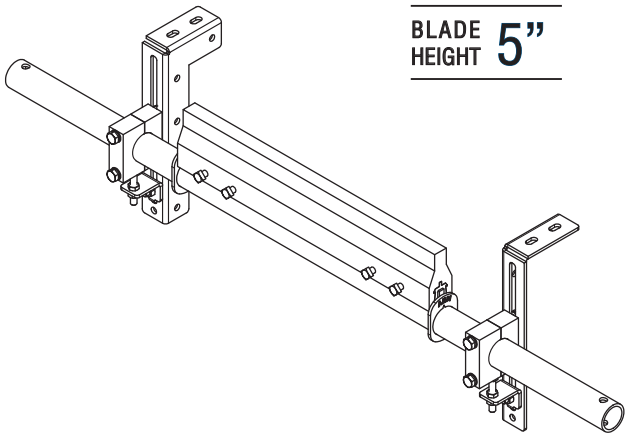

E7SC7-M-UR Urethane Blade

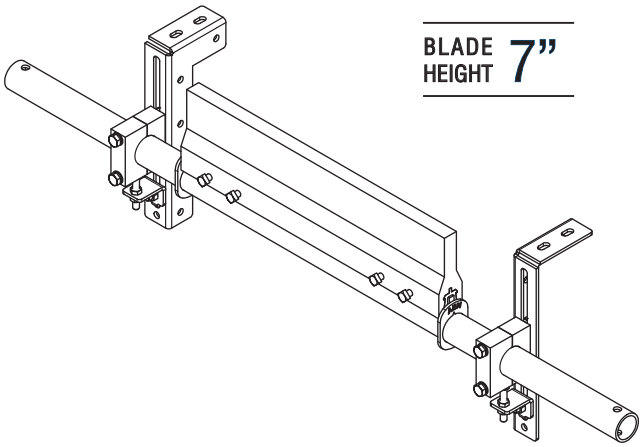

E7SC5-M-AR Blade

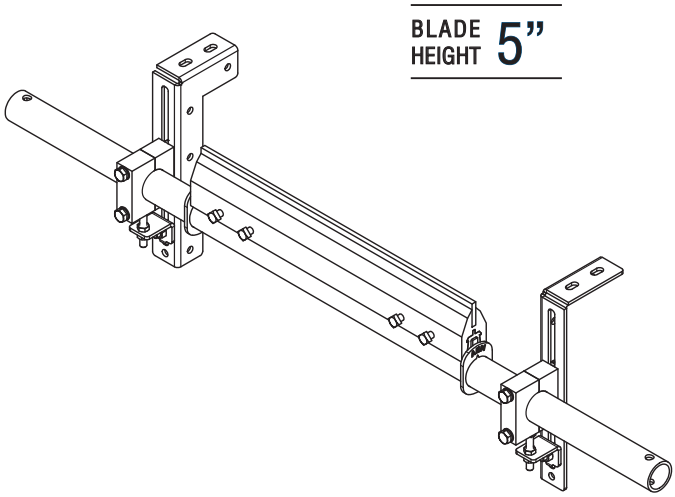

E7SC7-M-AR Blade

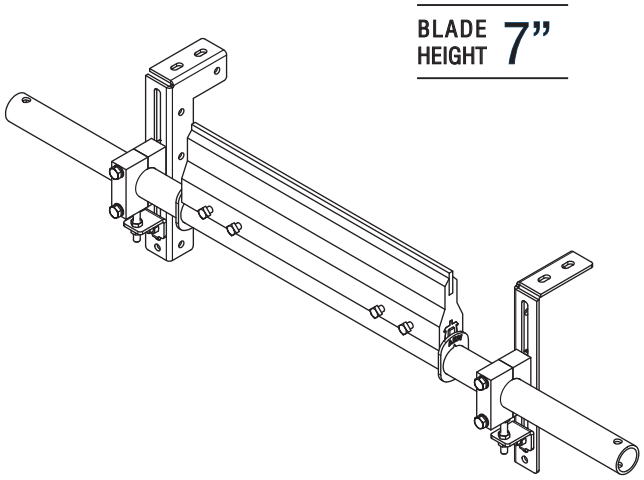

E7SC5-M-GC Carbide Blade

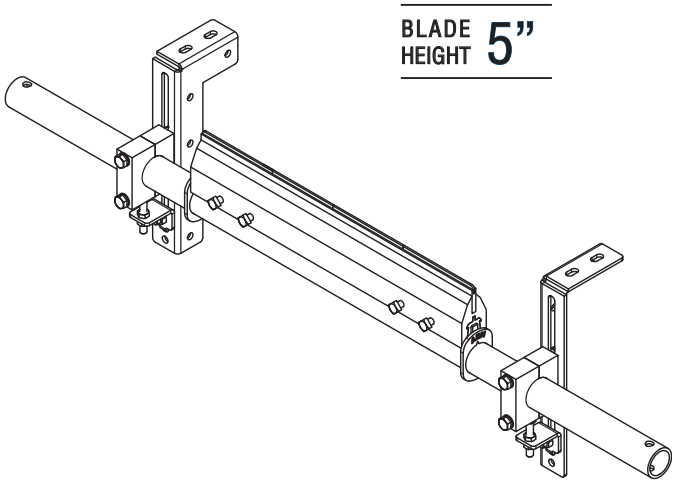

E7SC7-M-GC Carbide Blade

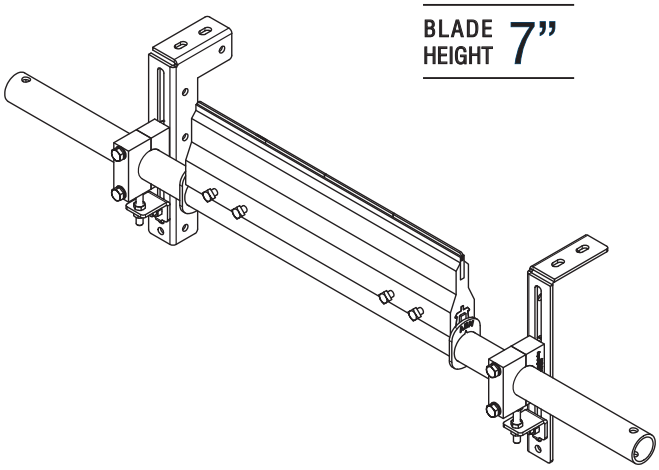

INSTALLATION CHECK LIST

Confirmation of Cleaner Series and Size

- Check that the cleaner size is correct for the belt width
- Check the belt cleaner assembly and confirm all the parts are included

Tools Required

- (2) 6” C Clamps
- Tape Measure
- 3/4” (19mm) wrench
- Rachet with 3/4” socket
- Cutting torch and/or drill

AEM Tool Kit for E7SC Cleaner

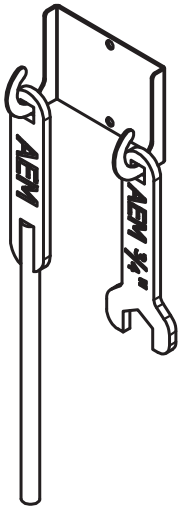

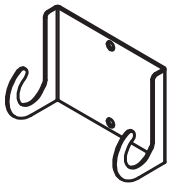

AEM Tool Holder Bracket

For hanging cleaner tools
Install by welding/bolting to chute close to cleaner

Cleaner Pipe Tool

For rotating pipe & blade to correct angle

3/4" Cleaner Tool

For tightening/loosening all hardware on cleaner and blade

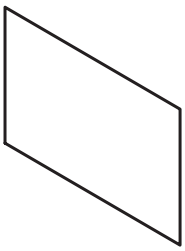

E7SC Cleaner Sticker

For identifying Cleaner
Place Sticker onto the AEM tool Hold Bracket

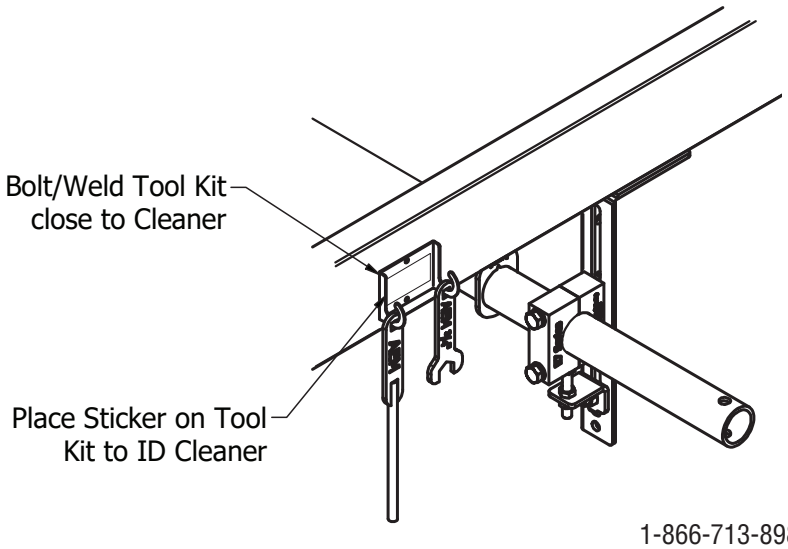

E7SC INSTALLATION INSTRUCTIONS

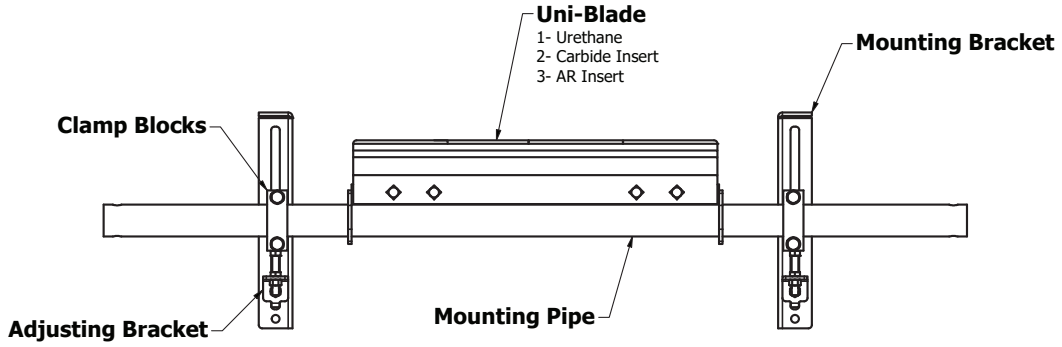

***IMPORTANT:** MAKE SURE CONVEYOR IS LOCKED OUT/TAGGED OUT BEFORE ANY WORK BEGINS.

BEFORE YOU BEGIN INSTALLATION:

Make sure the correct Cleaner is being installed. The E7SC Cleaner is to be installed on Conveyor Frames **ONLY!**

Step 1. - Location

It is preferred to install the Cleaner with Blade contact 4" downstream from the point where the conveyor belt leaves the Head Pulley (see Fig. A). If no room is available at this location, install the Cleaner with Blade contact 6" upstream from the Snub Roller.

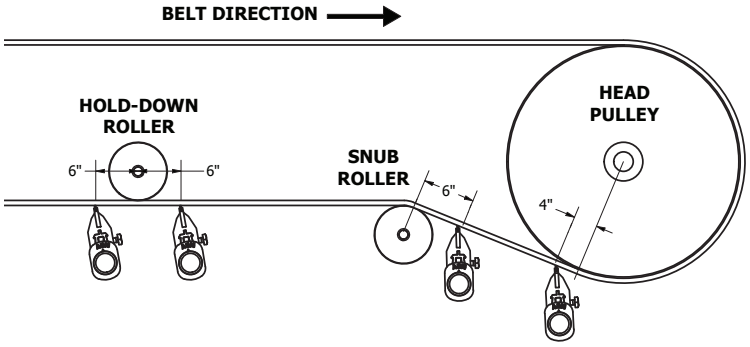

Fig. A

***NOTE:** if Cleaner has to be installed further downstream and no Snub Roller is available, a Hold-Down Roller is recommended to ensure the belt is flat (no cupping) to achieve optimal cleaning. Install Cleaner 6" upstream or downstream of the Hold-Down Roller.

Step 2. - Mounting Bracket Installation to Conveyor Frame

Draw a Blade Tip Location line on the belt and transfer the line to Conveyor Frame shown in Fig. B.

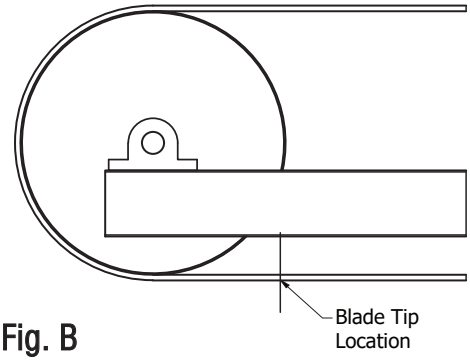

Fig. B

Duplicate Location on both sides of Conveyor Frame

Step 3 - Mounting Bracket Hole Locations

Measure and mark the hole locations for the Mounting Brackets. Measure and mark the first hole 3.5” from the Blade Tip Location line. Measure and mark the second hole 6” from the first hole. Drill the holes using a 5/8” drill bit. Duplicate hole locations to both sides of the Conveyor Frame. See Fig. C.

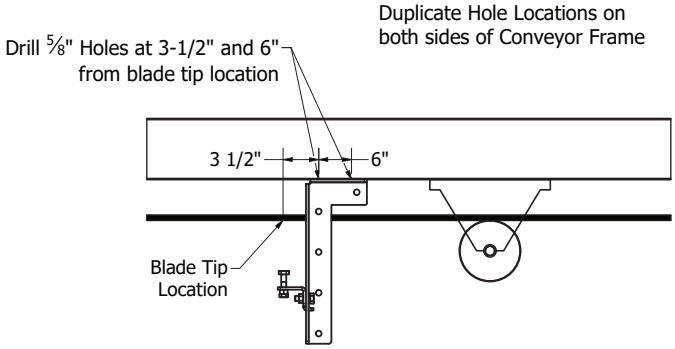

Fig. C

Step 4 - Attaching Mounting Block to Bracket

1) Measure your overall Uni-Blade height.

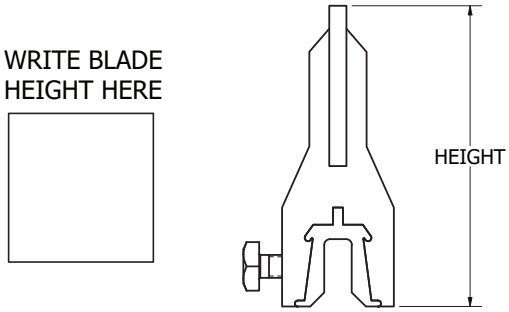

2) Measure the distance from the bottom of the Conveyor Belt to the top of the radius on the Clamp Block (see Fig. D), using the Blade height +1/2”. This will assist in getting the Blade location close for final adjustment.

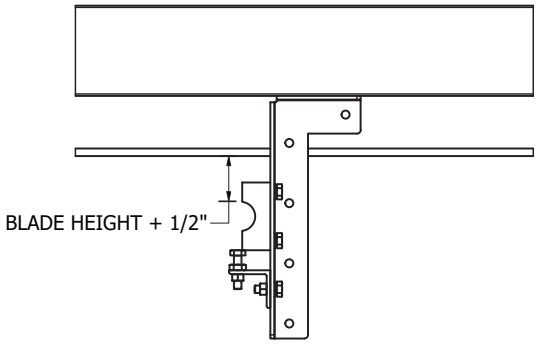

Fig. D

3) If additional room is necessary for Uni-Blade fitment, flip Adjustment Bracket 180º so that the flange is on the bottom (see Fig. E). Install the hex jam nut and Blade Adjustment Bolt on top of the weld nut. Measure the distance from the bottom of the Conveyor Belt to the top of the radius on the Clamp Block, using the Blade height +1/2”.

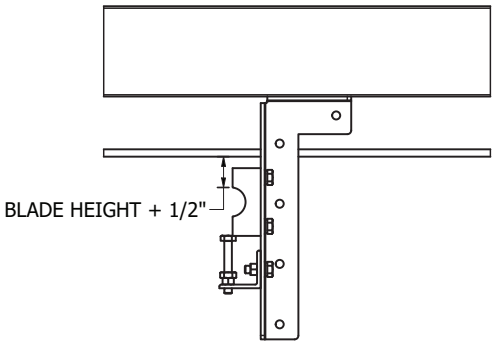

Fig. E

Step 5 – Attaching the Mounting Pipe to the Clamp Blocks

Install the Mounting Pipe into the Clamp Blocks as shown in Fig. F. Bolt down one Clamp Block to the Cleaner, leaving it loose so that the Mounting Pipe can rest on one side. Install the second Clamp Block to the opposite side of the Cleaner as shown.

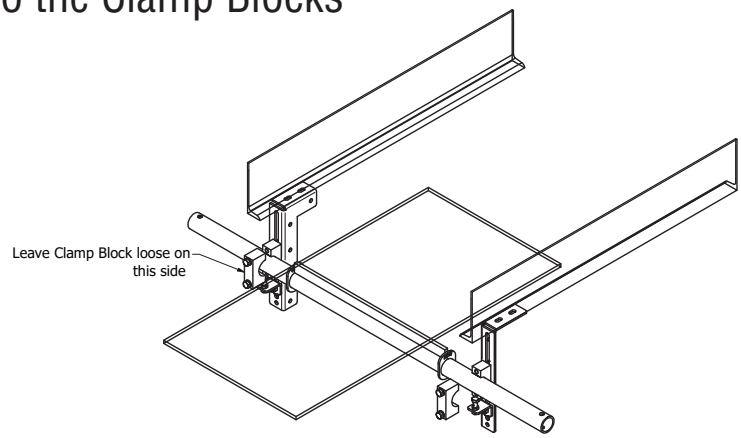

Fig. F

Step 6 – Attaching Uni-Blade to Mounting Pipe

Install the Uni-Blade to the Mounting Pipe (see Fig. G). Tighten the set screws on the Uni-Blade using the ¾" AEM Cleaner Tool.

***NOTE: If enough clearance is possible to allow access to the set screws, install the Uni-Blade with the set screws on the back of the Cleaner to prevent wear on the set screws.**

***IMPORTANT: DO NOT OVERTIGHTEN THE SET SCREWS! THIS WILL CAUSE THE THREADS TO STRIP OUT!**

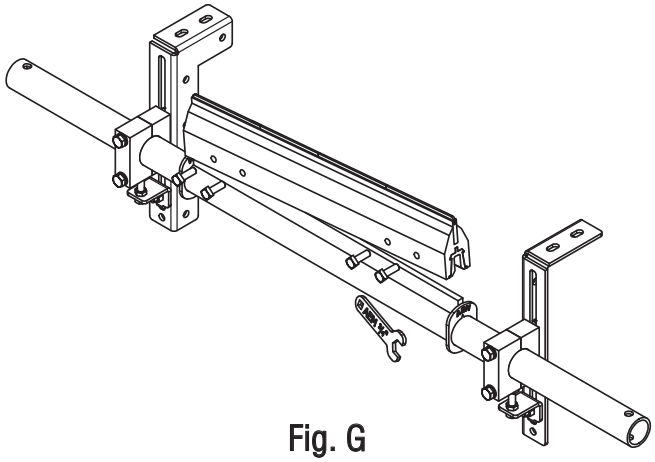

Fig. G

Center the Uni-Blade on the Conveyor Belt, making sure that the Uni-Blade extends past the Belt 1-1/2" on both sides as shown in Fig. H.

Hand-tighten bolts on Clamp Blocks, leaving Clamp Blocks loose so that Mounting Pipe and Uni-Blade can be rotated to the proper angle.

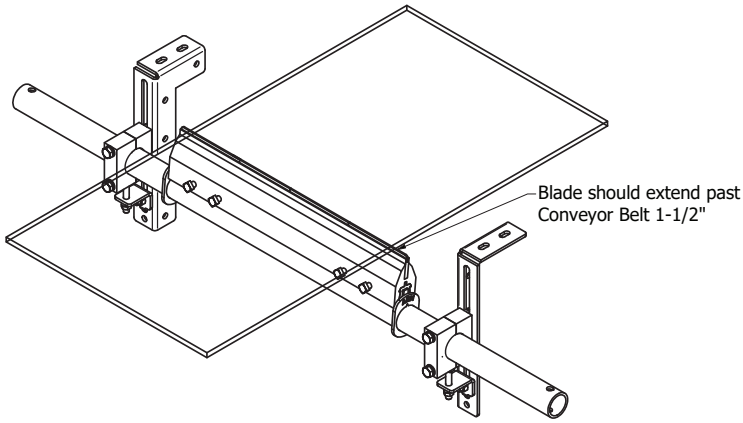

Fig. H

Step 6 Continued

Using the Cleaner Pipe tool, rotate the Mounting Pipe and Uni-Blade (see Fig. I). Use the below parameters for setting the correct angle of the Uni-Blade.

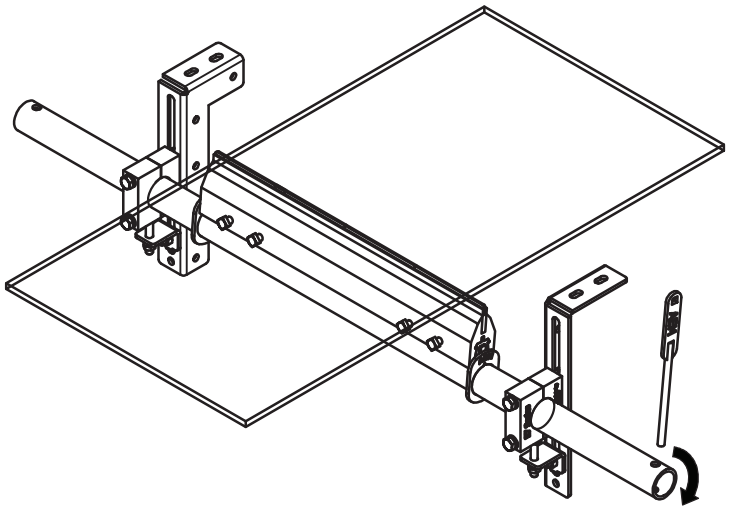

Fig. I

CAUTION

Urethane Uni-Blades:

- 6-8º Angle
- Can be 0º for reversing Belts

  (Urethane Uni-Blades ONLY!)

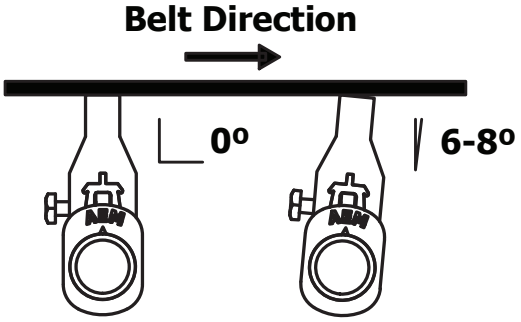

AR/Carbide Insert Uni-Blades:

- 6-8º ONLY!

CAUTION

6-8º Angle setting is CRITICAL!

AR/Carbide Insert Uni-Blades

CANNOT be used on Reversing Belts!

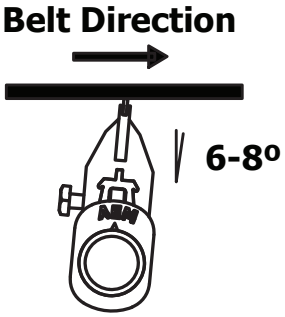

Step 7 - Adjusting Uni-Blade Tension

Raise the Uni-Blade up to the Conveyor Belt until the tip of the Uni-Blade is touching the Belt ***equally on both sides.***

Raise the Adjusting Bracket until the head of the Adjusting Bolt is touching the Clamp Blocks.

Loosen the Jam Nut on the bottom of the Adjusting Bracket using the 3/4” Cleaner Tool.

Using the 3/4” Cleaner Tool and a tape measure, turn the Adjusting Bolt to adjust the tension ***equally on both sides.***

The adjustments should be **NO MORE THAN** 1/8” for Carbide- and AR-tipped Uni-Blades, and **NO MORE THAN** 1/4” for Urethane Uni-Blades.

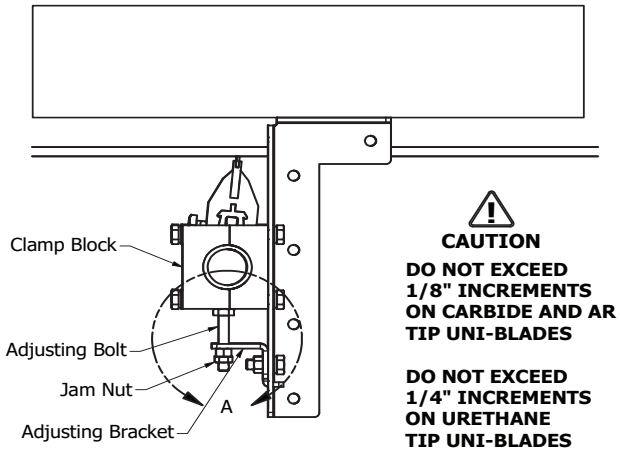

Fig. J

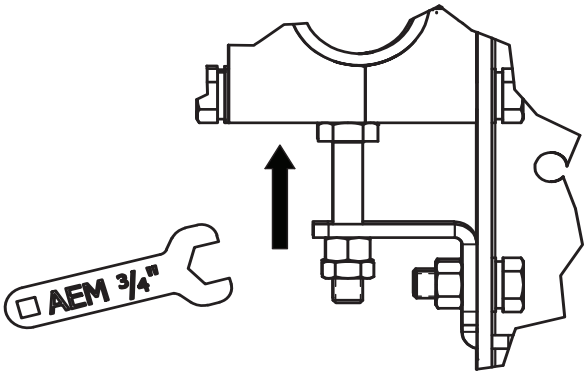

DETAIL A
SCALE 0.40 : 1

*NOTE: If there is no contact of Uni-Blade in the center of the Belt, use a Hold-Down Roller to create even pressure across the Belt. (See Step 1)

CAUTION For Carbide Tip and AR Tip Blades, DO NOT OVER TENSION!

CAUTION Carbide Tip Blades are NOT RECOMMENDED WITH MECHANICAL SPLICES!

Step 8

Once everything is set at the proper tension, tighten all bolts on both sides of the Clamp Blocks along with the jam nuts on the Adjustment Brackets.

Step 9

TEST RUN THE CLEANER. Make sure there is full coverage of the Belt with the Uni-Blade and full Blade contact. If vibration occurs or cleaning is insufficient, adjust Blade tension on both sides at 1/16" increments.

Step 10

After ensuring that the Cleaner Assembly is adjusted properly, trim the Mounting Pipe if necessary to avoid a tripping hazard.

NOTES

American Eagle Manufacturing LLC
1 866 713 8985
252 633 0603
New Bern, North Carolina 28560
AmericanEagleManufacturing.com